UNFINISHED SHAFT ENDS

Screw shaft diameter ϕ20, Lead 60

(Unit : mm)

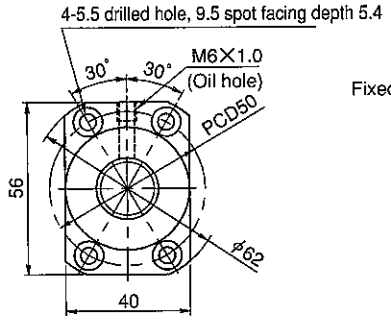

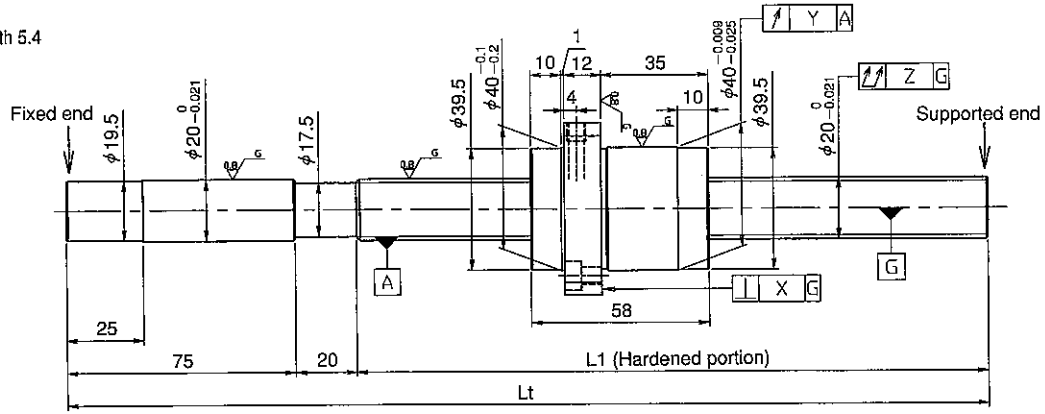

Model No.	Axial clearance	L_1	L_t	X	Y	Z	Lead accuracy ±Ec	Lead accuracy ec	Lead accuracy e300	Wiper	Mass (kg)
HG2060QS-BEZR-1000A	~0.010 (H)	905	1000	0.011	0.015	0.120	0.040	0.027	0.018	※	2.73
HG2060QS-BEZR-1500A		1405	1500			0.190	0.054	0.035			3.86

- JIS B 1192-1987 applies to accuracy standard values shown in the above-mentioned table.
- Asterisked part ※ : The lip of the end cap serves as a wiper.
- Support unit : BUK-15A (BUK-15F, BUK-15S) and BUM-15 is recommended. (Refer to P.398)
- The grease is contained inside of nut only at the time of delivery. When using it, apply lubricant.

Notation of standard ground ball screw

●Standard length shaft without end machining
HG2060QS-BEZR-□□□□A

●With end machining specified on your drawing
HG2060QS-□EZR-□□□□X□□□□-C5H
(Overall length: □□□□; Thread length: □□□□)

Table of optional specifications for each model

Additional machining of shaft end	Axial clearance adjustment (Note 2)	Surface treatment (Note 1)	Difference of grease	Direction of nut	Wiper removal
○	△	○	○	○	—

(Note 1) The above-mentioned surface treatment is LD treament (coating thickness : 1 to 2 μm).

(Note 2) For axial clearance adjustment, contact KURODA.

Ball screw specifications

Screw shaft dia.	20	Axial clearance	~0.010 (H)
Lead	60	Basic dynamic load rating	6800N
Thread direction	Right-hand	Basic static load rating	12100N
Number of circuits	0.67turn 3circuit	Spacer ball	—
Ball diameter	3.175	Lubricant	Alvania Grease No.2
Number of thread	3		

Refer to page 24 for NOTATION OF MODEL NUMBER.

SHAFT END FINISH ORDERING SHEET

Screw shaft diameter ϕ20, Lead 60

(Unit : mm)

HG2060QS-BEZR- [ ][ ][ ][ ] X [ ][ ][ ][ ] -C5H

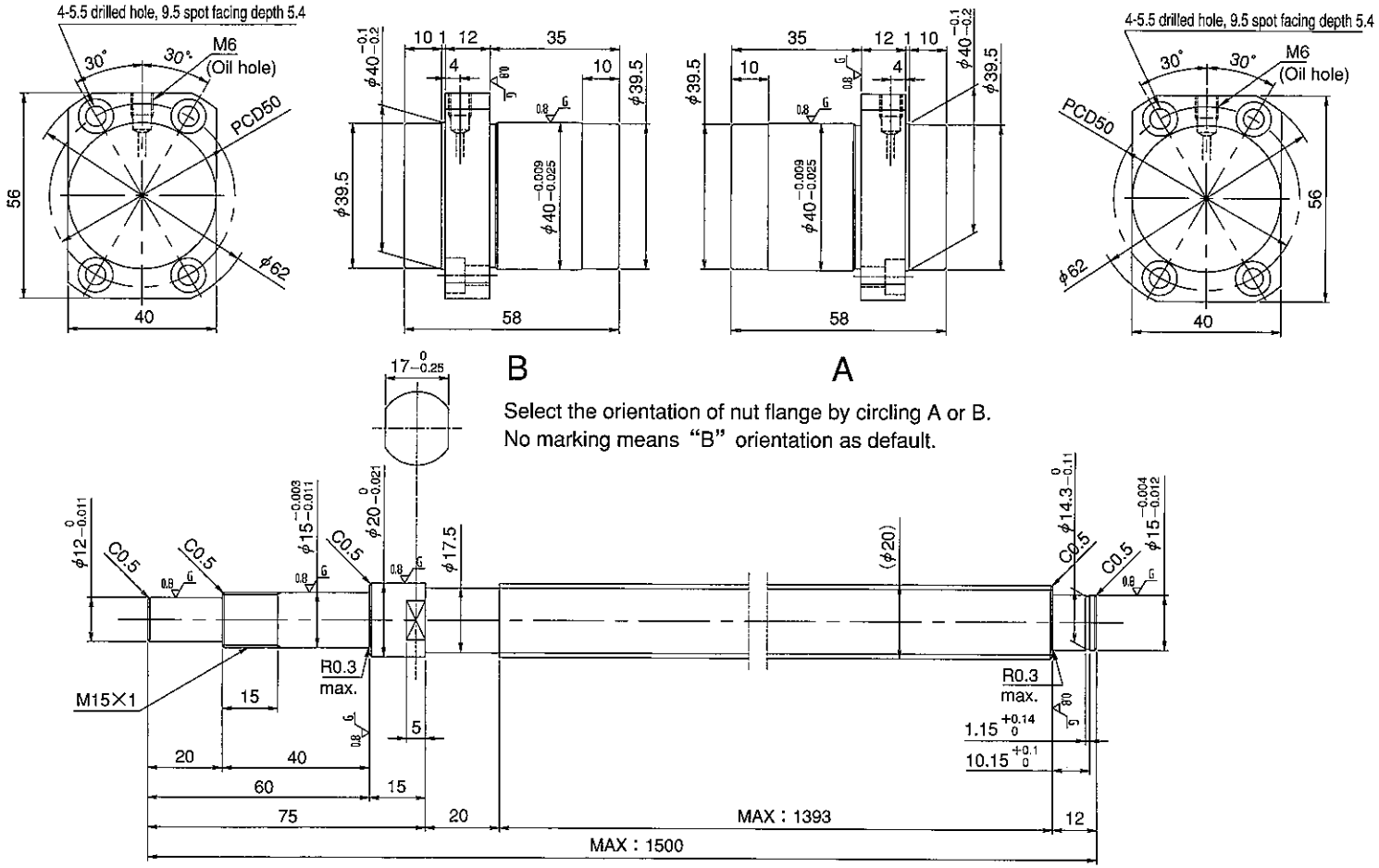

Select the orientation of nut flange by circling A or B.
No marking means "B" orientation as default.

Applicable Support Unit
Direct mount : BUK-15A (Fixed end unit+Supported end unit) Refer to Page.406
Circle flange : BUM-15 (Fixed end unit+Supported end bearing) Refer to Page.413

Company Name			
Telephone		Name of Person in Charge	
Company Address			

Refer to page 24 for NOTATION OF MODEL NUMBER.