UNFINISHED SHAFT ENDS

Screw shaft diameter ϕ40, Lead 20 (U nut)

(Unit : mm)

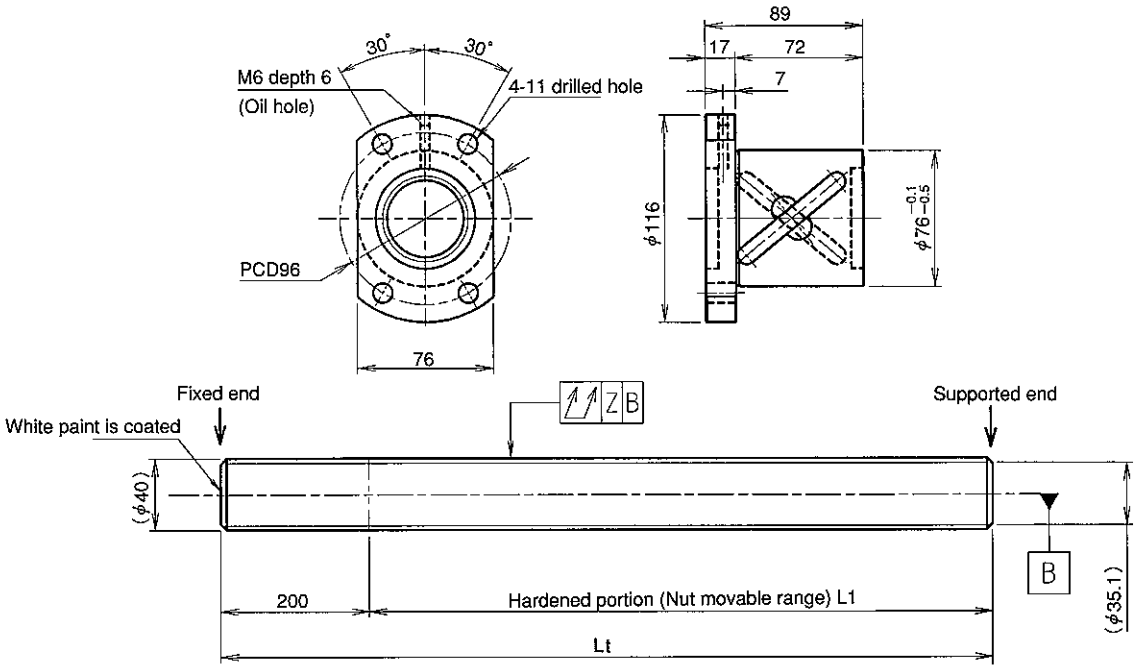

Ball screw specifications

Screw shaft dia.	40	Basic dynamic load rating	37100N
Lead	20	Basic static load rating	105600N
Thread direction	Right-hand	Lubricant	Alvania Grease No.2
Number of circuits	2.5turn 2circuit	Surface treatment	Phosphate coating
Ball diameter	6.350		

Model No.	Axial clearance	L_1	L_t	Z	Wiper
GY4020ES-HUBR-2000A	~0.200	1800	2000	0.240	Brush wiper
GY4020ES-HUBR-3000A		2800	3000	0.400	
GY4020ES-HUBR-4000A		3800	4000	0.640	

Table of optional specifications for each model

Additional machining of shaft end	Surface treatment (Note 1)	Difference of grease	Direction of nut	Wiper removal
○	○	○	○	○

(Note 1) The above-mentioned surface treatment is LD treatment (coating thickness : 1 to 2 μm).

Notation of standard rolled ball screw

●Standard length shaft without end machining (Matched screw shaft and nut)
GY4020ES-HUBR-□□□□A

●Nut only without screw shaft
GY4020ES-HUBR

●Screw shaft only without end machining
GY4020ZZ-ZZZZ-□□□□D

●With end machining specified on your drawing (Matched screw shaft and nut)
GY4020ES-HUBR-□□□□X□□□□-CAY

●With end machining specified on your drawing (Screw shaft only)
GY4020ZZ-ZZZZ-□□□□Y□□□□-CAY
Overall length Thread length

Refer to page 24 for NOTATION OF MODEL NUMBER.

SHAFT END FINISH ORDERING SHEET

Screw shaft diameter ϕ40, Lead 20 (U nut)

(Unit : mm)

GY4020ES-HUBR- [ ][ ][ ][ ] X [ ][ ][ ][ ] -CAY

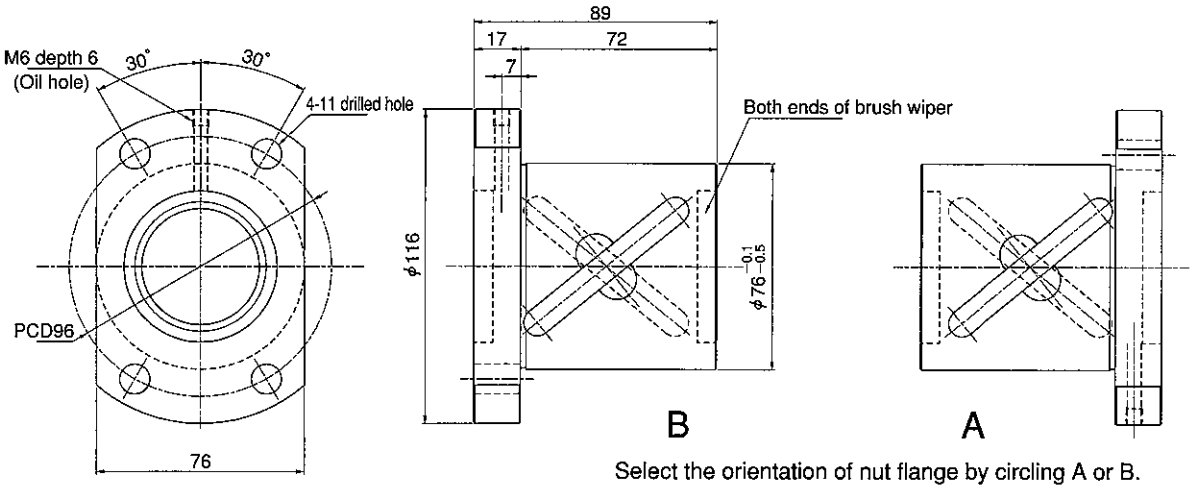

Select the orientation of nut flange by circling A or B.
No marking means "B" orientation as default.

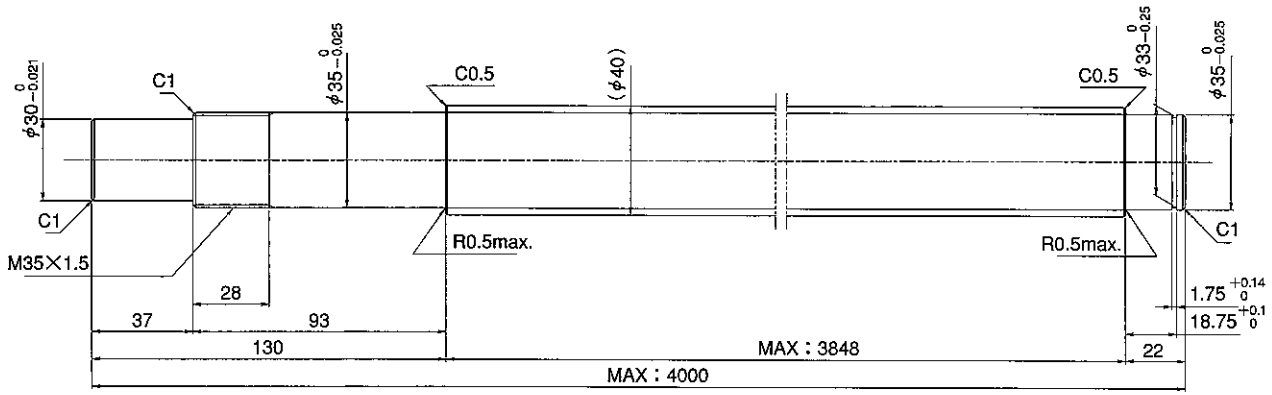

Applicable Support Unit
BUT-35 (Fixed end unit) Refer to Page.421

Company Name			
Telephone		Name of Person in Charge	
Company Address			

Refer to page 24 for NOTATION OF MODEL NUMBER.