UNFINISHED SHAFT ENDS

Screw shaft diameter ϕ25, Lead 10 (U nut)

(Unit : mm)

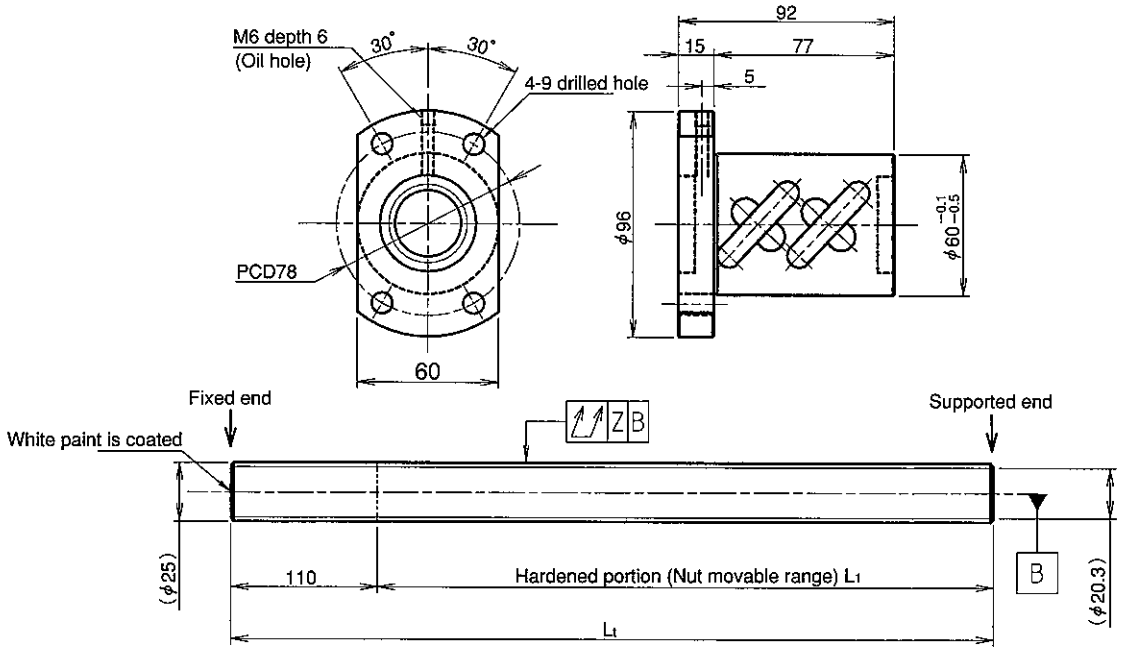

Ball screw specifications

Screw shaft dia.	25	Basic dynamic load rating	27500N
Lead	10	Basic static load rating	76300N
Thread direction	Right-hand	Lubricant	Alvania Grease No.2
Number of circuits	2.5turn 2circuit	Surface treatment	Phosphate coating
Ball diameter	6.350		

Model No.	Axial clearance	L_1	L_t	Z	Wiper
GY2510ES-HULR-1000A	~0.200	890	1000	0.160	Lip seal
GY2510ES-HULR-2000A		1890	2000	0.400	
GY2510ES-HULR-2500A		2390	2500	0.640	

Table of optional specifications for each model

Additional machining of shaft end	Surface treatment (Note 1)	Difference of grease	Direction of nut	Wiper removal
○	○	○	○	○

(Note 1) The above-mentioned surface treatment is LD treatment (coating thickness : 1 to 2 μm).

Notation of standard rolled ball screw

●Standard length shaft without end machining (Matched screw shaft and nut)
GY2510ES-HULR-□□□□A

●Nut only without screw shaft
GY2510ES-HULR

●Screw shaft only without end machining
GY2510ZZ-ZZZZ-□□□□D

●With end machining specified on your drawing (Matched screw shaft and nut)
GY2510ES-HULR-□□□□X□□□□-CAY

●With end machining specified on your drawing (Screw shaft only)
GY2510ZZ-ZZZZ-□□□□Y□□□□-CAY
Overall length Thread length

Refer to page 24 for NOTATION OF MODEL NUMBER.

SHAFT END FINISH ORDERING SHEET

Screw shaft diameter ϕ25, Lead 10 (U nut)

(Unit : mm)

GY2510ES-HULR- □□□□ X □□□□ -CAY

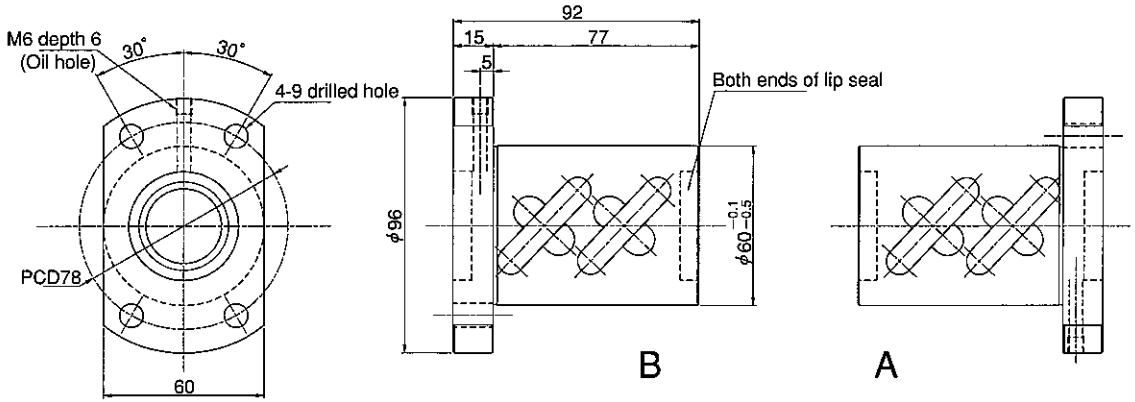

Select the orientation of nut flange by circling A or B.
No marking means "B" orientation as default.

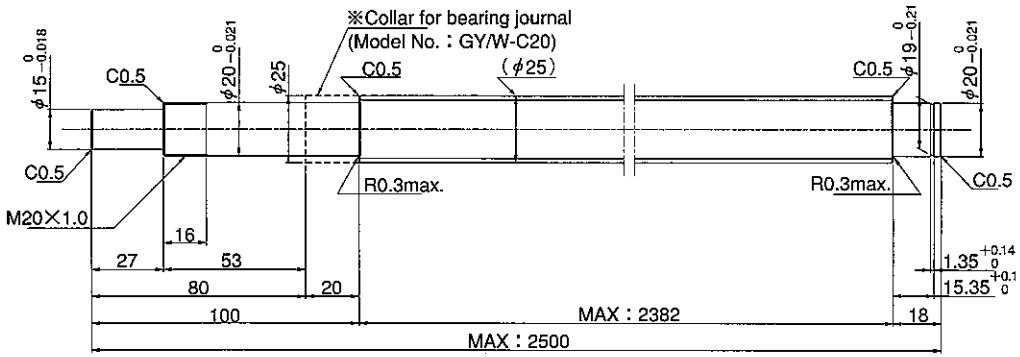

※Please place an order for collar separately.

Applicable Support Unit

Direct mount : BUK-20A (Fixed end unit+Supported end unit) Refer to Page.407

Circle flange : BUM-20 (Fixed end unit+Supported end bearing) Refer to Page.414

Company Name			
Telephone		Name of Person in Charge	
Company Address			

Refer to page 24 for NOTATION OF MODEL NUMBER.