UNFINISHED SHAFT ENDS

Screw shaft diameter ϕ20, Lead 40 (E nut)

(Unit : mm)

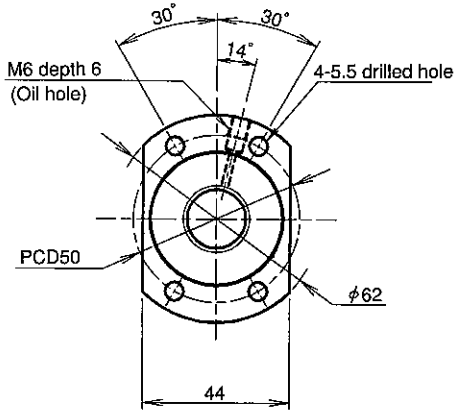

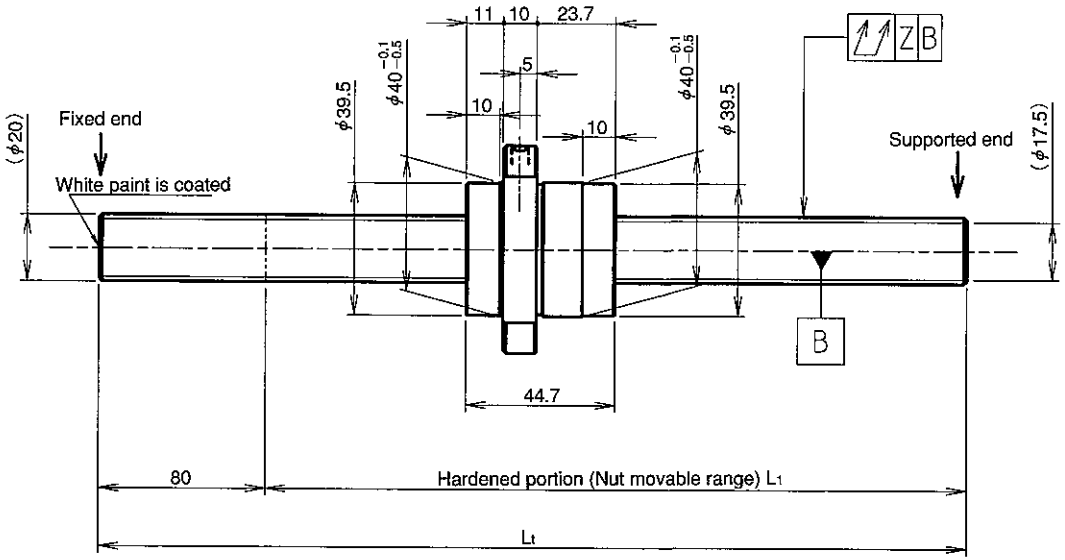

Ball screw specifications

Screw shaft dia.	20	Basic dynamic load rating	4700N
Lead	40	Basic static load rating	10300N
Thread direction	Right-hand	Lubricant	Alvania Grease No.2
Number of circuits	0.67turn 3circuit	Surface treatment	Phosphate coating
Ball diameter	3.175		

Model No.	Axial clearance	L_1	L_t	Z	Wiper
GY2040QS-HEZR-0600A	~0.100	520	600	0.140	*
GY2040QS-HEZR-1200A		1120	1200	0.240	
GY2040QS-HEZR-2000A		1920	2000	0.640	

・Asterisked part * : The lip of the end cap serves as a wiper.

Table of optional specifications for each model

Additional machining of shaft end	Surface treatment (Note 1)	Difference of grease	Direction of nut	Wiper removal
○	○	○	○	×

(Note 1) The above-mentioned surface treatment is LD treatment (coating thickness : 1 to 2 μm).

Notation of standard rolled ball screw

●Standard length shaft without end machining (Matched screw shaft and nut)
GY2040QS-HEZR-□□□□A

●Nut only without screw shaft
GY2040QS-HEZR

●Screw shaft only without end machining
GY2040ZZ-ZZZZ-□□□□D

●With end machining specified on your drawing (Matched screw shaft and nut)
GY2040QS-HEZR-□□□□X□□□□-CAY

●With end machining specified on your drawing (Screw shaft only)
GY2040ZZ-ZZZZ-□□□□Y□□□□-CAY
Overall length Thread length

Refer to page 24 for NOTATION OF MODEL NUMBER.

SHAFT END FINISH ORDERING SHEET

Screw shaft diameter ϕ20, Lead 40 (E nut)

(Unit : mm)

GY2040QS-HEZR- ☐☐☐☐ X ☐☐☐☐ -CAY

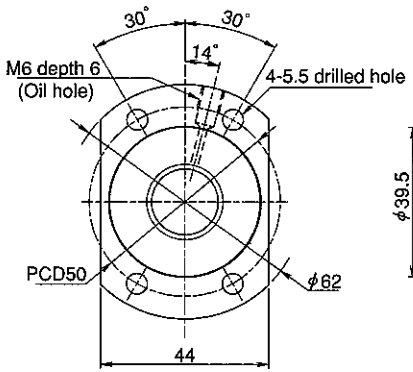

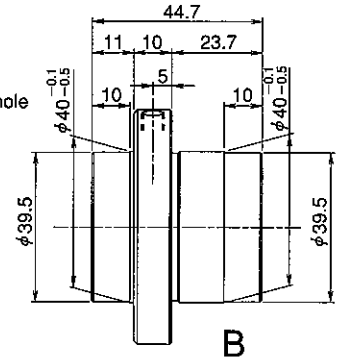

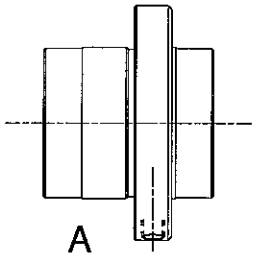

Select the orientation of nut flange by circling A or B.
No marking means "B" orientation as default.

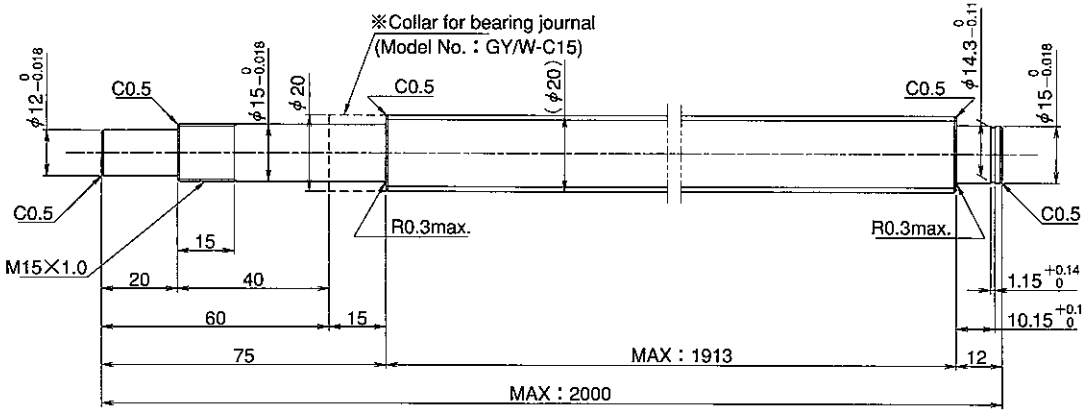

※Please place an order for collar separately.

Applicable Support Unit

Direct mount : BUK-15A (Fixed end unit+Supported end unit) Refer to Page.406

Circle flange : BUM-15 (Fixed end unit+Supported end bearing) Refer to Page.413

Company Name			
Telephone		Name of Person in Charge	
Company Address			