UNFINISHED SHAFT ENDS

Screw shaft diameter ϕ16, Lead 32 (E nut)

(Unit : mm)

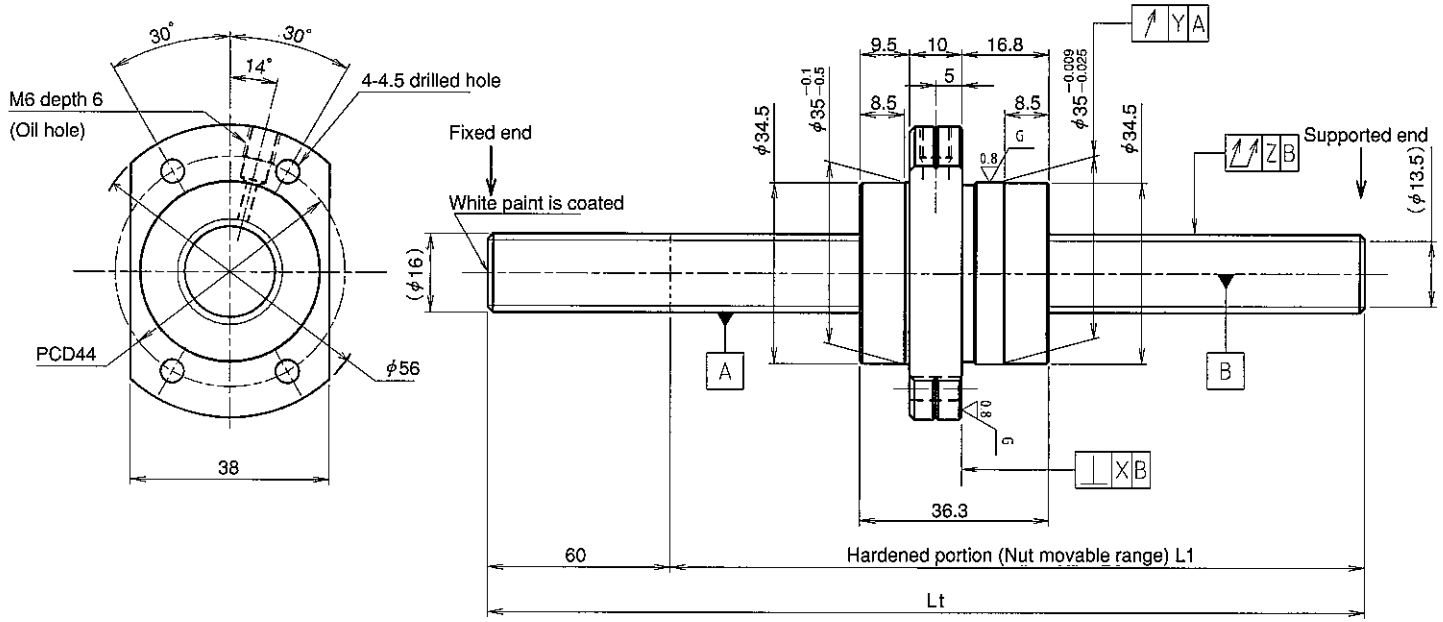

Ball screw specifications

Screw shaft dia.	16	Basic dynamic load rating	4200N
Lead	32	Basic static load rating	7700N
Thread direction	Right-hand	Lubricant	Alvania Grease No.2
Number of circuits	0.67turn 3circuit	Surface treatment	Without
Ball diameter	3.175		

Model No.	Axial clearance	L_1	L_t	X	Y	Z	Wiper
GW1632QS-HEZR-0600A	~0.030	540	600	0.025	0.025	0.070	*
GW1632QS-HEZR-1200A		1140	1200			0.170	

・Asterisked part * : The lip of the end cap serves as a wiper.

Table of optional specifications for each model

Additional machining of shaft end	Surface treatment (Note 1)	Difference of grease	Direction of nut	Wiper removal
○	○	○	○	×

(Note 1) The above-mentioned surface treatment is LD treatment (coating thickness : 1 to 2 μm).

Notation of standard rolled ball screw

●Standard length shaft without end machining

GW1632QS-HEZR-□□□□A

●With end machining specified on your drawing

GW1632QS-HEZR-□□□□X□□□□-C7Y

Overall length Thread length

Refer to page 24 for NOTATION OF MODEL NUMBER.

SHAFT END FINISH ORDERING SHEET

Screw shaft diameter ϕ16, Lead 32 (E nut)

(Unit : mm)

GW1632QS-HEZR- [ ][ ][ ][ ] X [ ][ ][ ][ ] -C7Y

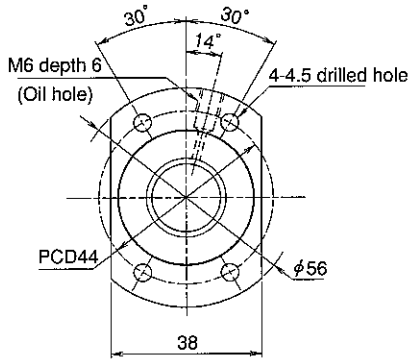

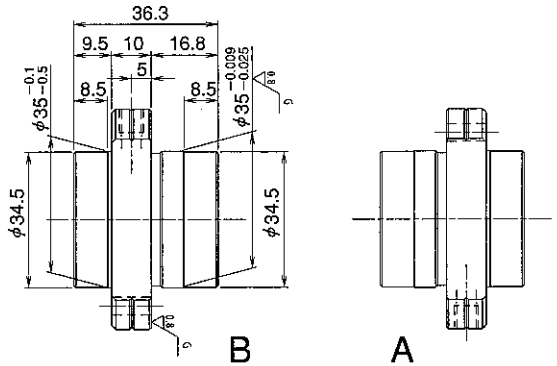

Select the orientation of nut flange by circling A or B.
No marking means "B" orientation as default.

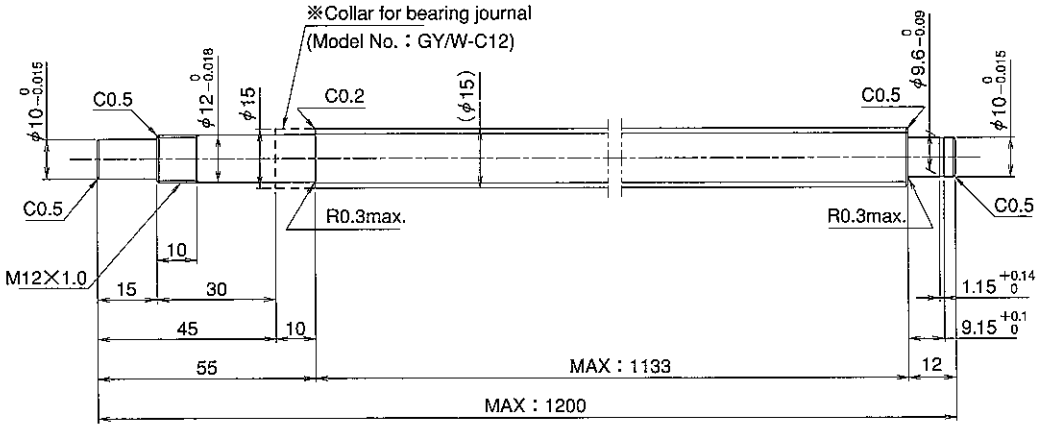

※Please place an order for collar separately.

Applicable Support Unit

Direct mount : BUK-12A (Fixed end unit+Supported end unit) Refer to Page.405

Circle flange : BUM-12 (Fixed end unit+Supported end bearing) Refer to Page.412

Company Name			
Telephone		Name of Person in Charge	
Company Address			

Refer to page 24 for NOTATION OF MODEL NUMBER.